Interband Tunneling Diodes for High Performance Electronics and Millimeter Wave Detection

D.H. Chow, J. N. Schulman, E.T. Croke, H.L. Dunlap, K.S. Holabird
HRL Laboratories

P. Fay, J. Lu, Y. Xu, G.H. Bernstein
University of Notre Dame

A. Gonzalez, P. Mazumder
University of Michigan

M.A. Morgan, S. Weinreb
Caltech / JPL

3rd Antimonide workshop
July 31, 2001

© 1998 HRL Laboratories, LLC. All Rights Reserved

Properties of InAs/AlSb/GaSb tunneling devices

- Ultrafast operation (e.g., 1ps switch, f_{max}>1THz)
- Low power consumption
- Small device footprint (as small as 80 nm demonstrated)
- Increased functionality
- Operation at or near zero bias

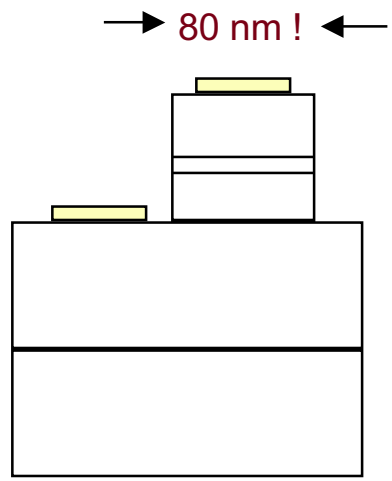

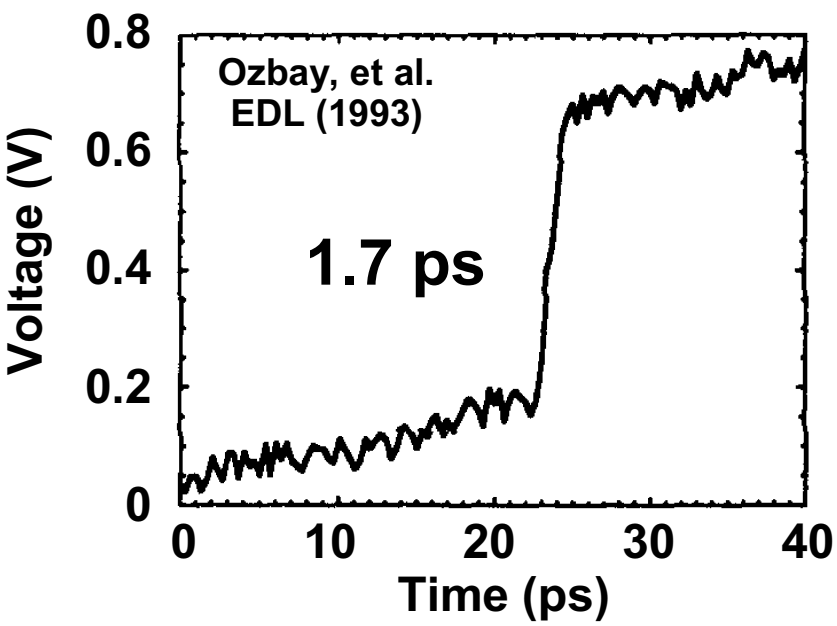

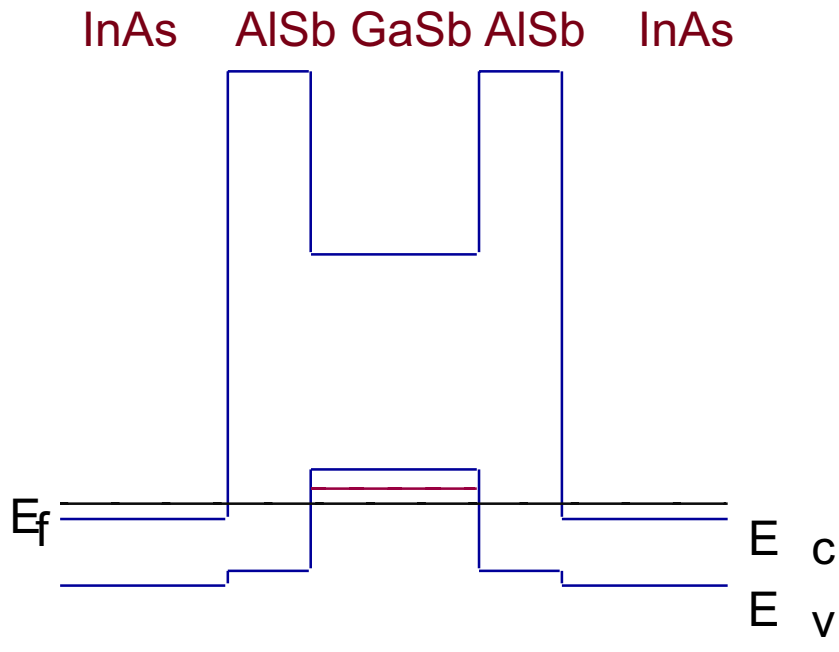

© 1998 HRL Laboratories, LLC. All Rights Reserved

RITDs OPERATE OVER A WIDE CURRENT DENSITY RANGE

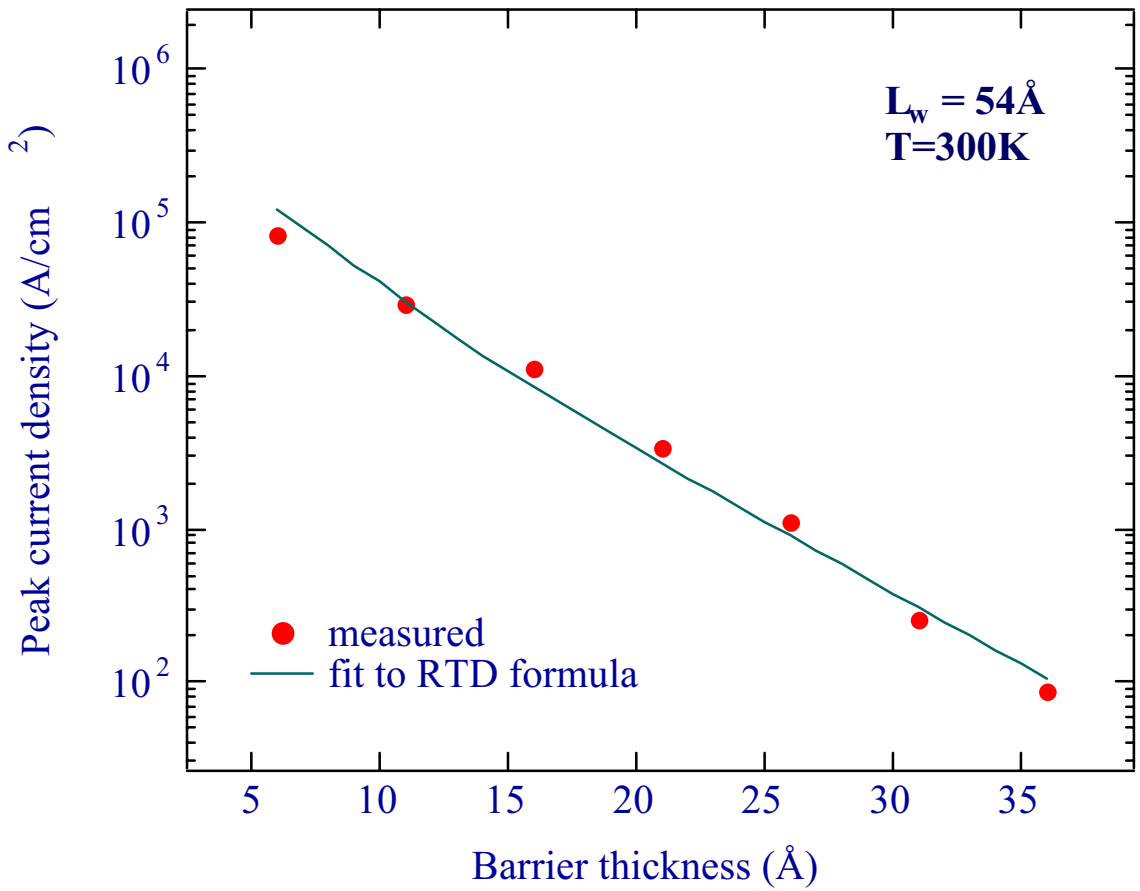

- P/V > 8 over entire J_p range
- Speed index = J_p/C_j
- Characteristics relatively insensitive to Lw
- Normally deposited on GaAs

© 1998 HRL Laboratories, LLC. All Rights Reserved

Advantages of RITDs relative to RTDs

- Low V_p, low V_f
- Large P/V over a wider current density range
- Routinely fabricated on semi-insulating GaAs

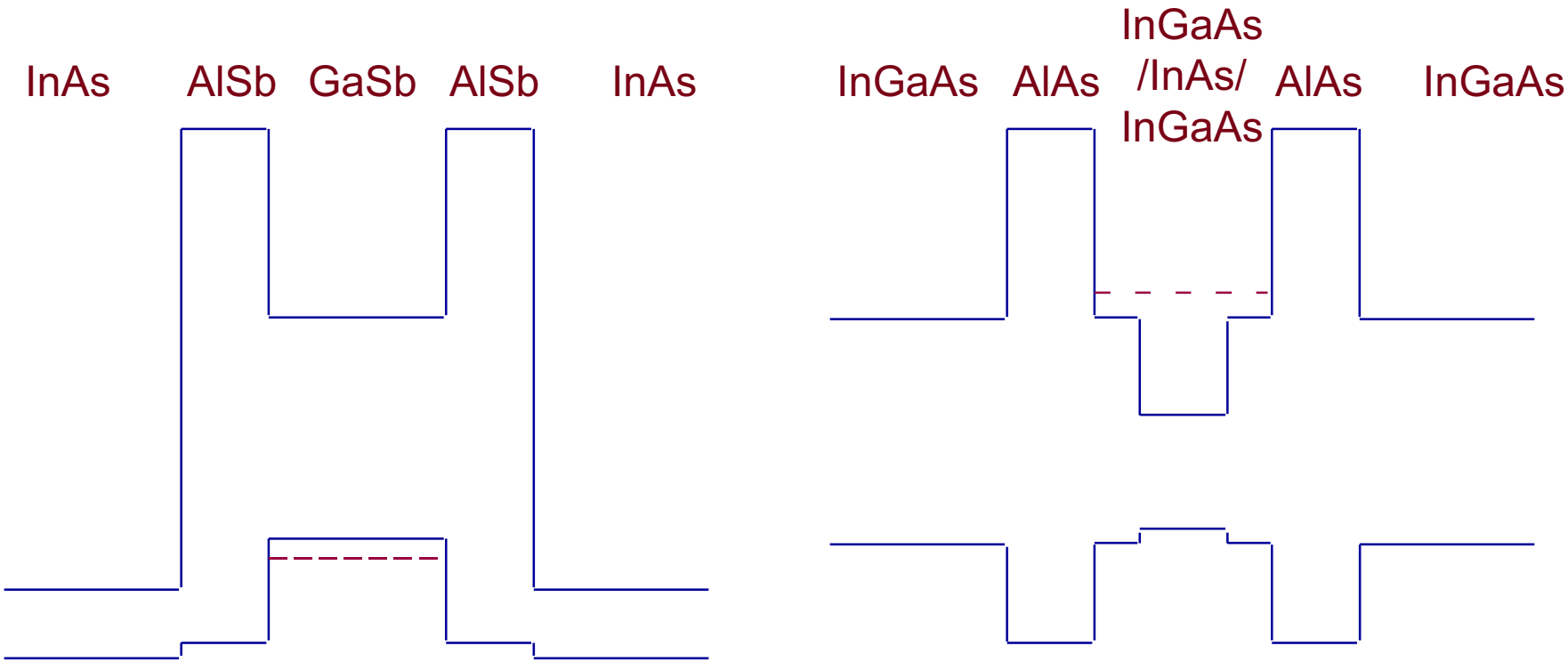

© 1998 HRL Laboratories, LLC. All Rights Reserved

Comparison of RITD and RTD I-V characteristics for V_p=0.1

RITD

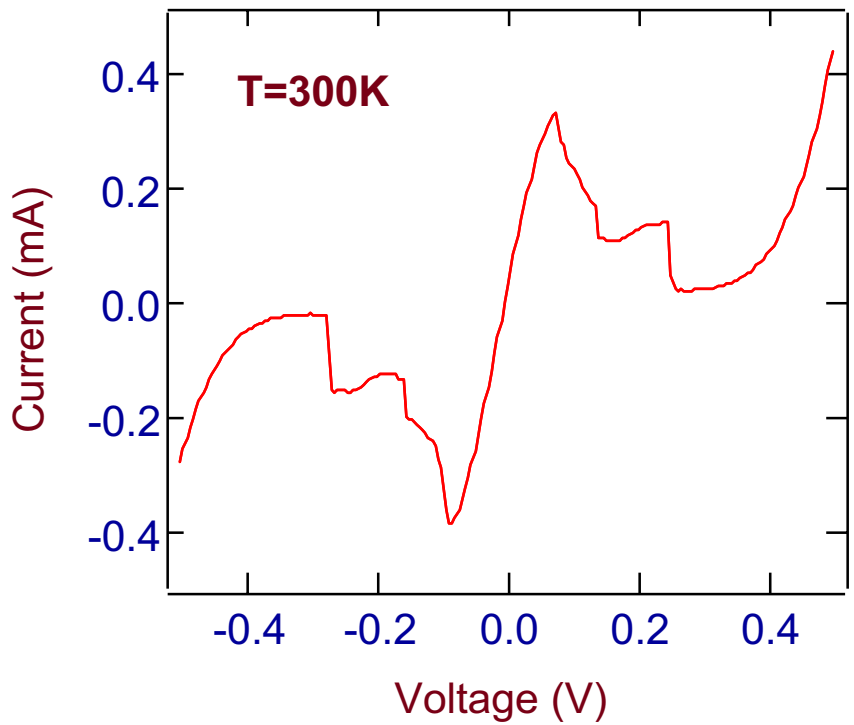

RTD

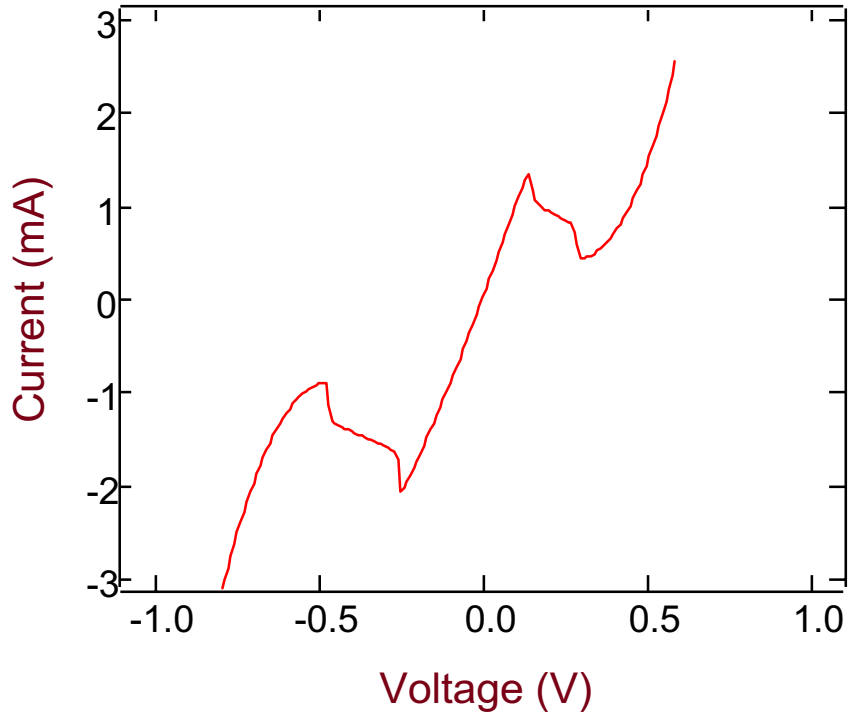

© 1998 HRL Laboratories, LLC. All Rights Reserved

Quantum Bistable Logic Implemented in InAs/AlSb/GaSb Technology

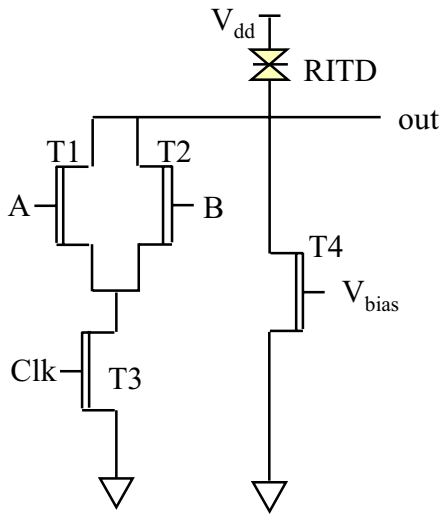

- **Collaboration with Notre Dame and U. of Michigan**
- **Supply voltage can be reduced to 0.5 V -1 V**
- **HRL developed epitaxial materials capability and device structure design**
- **RITD superior to InP-based RTDs for low power and noise margin (see chart below)**
- **Straightforward scaling to <1µW per gate**

Above: Two-input NOR gate based on Quantum Bistable Logic
Below: I-V characteristic for RITD

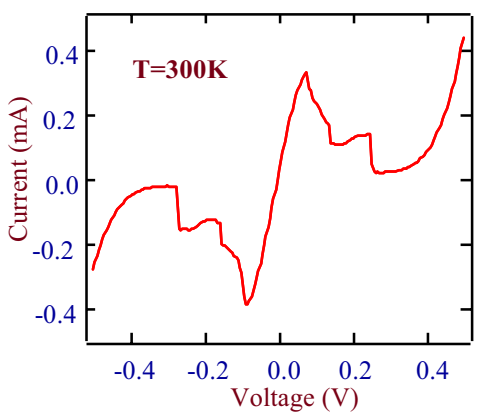

Characteristic	Figure of Merit	InP-based RTD/HFET (nearest competitor)	InAs/AlSb/GaSb RITD/HFET
Bandwidth	Speed Index $= J_p/CV_p$	1 ps (sufficient for >100 GHz circuits)	1 ps (sufficient for >100 GHz circuits)
Power Dissipation	Supply voltage $= V_{dd}$ (related to V_p, V_{th})	1.5 V	0.5 V (3 x better than InP 6x better than CMOS)
Noise margin	Voltage range Efficiency = V_f-V_p / V_f	0.6	0.83 (up to 10 x decrease in bit error rate)

© 1998 HRL Laboratories, LLC. All Rights Reserved

Square Law Detector: Voltage out proportional to Power (V^2) in

Nonlinear I(V) gives DC Offset

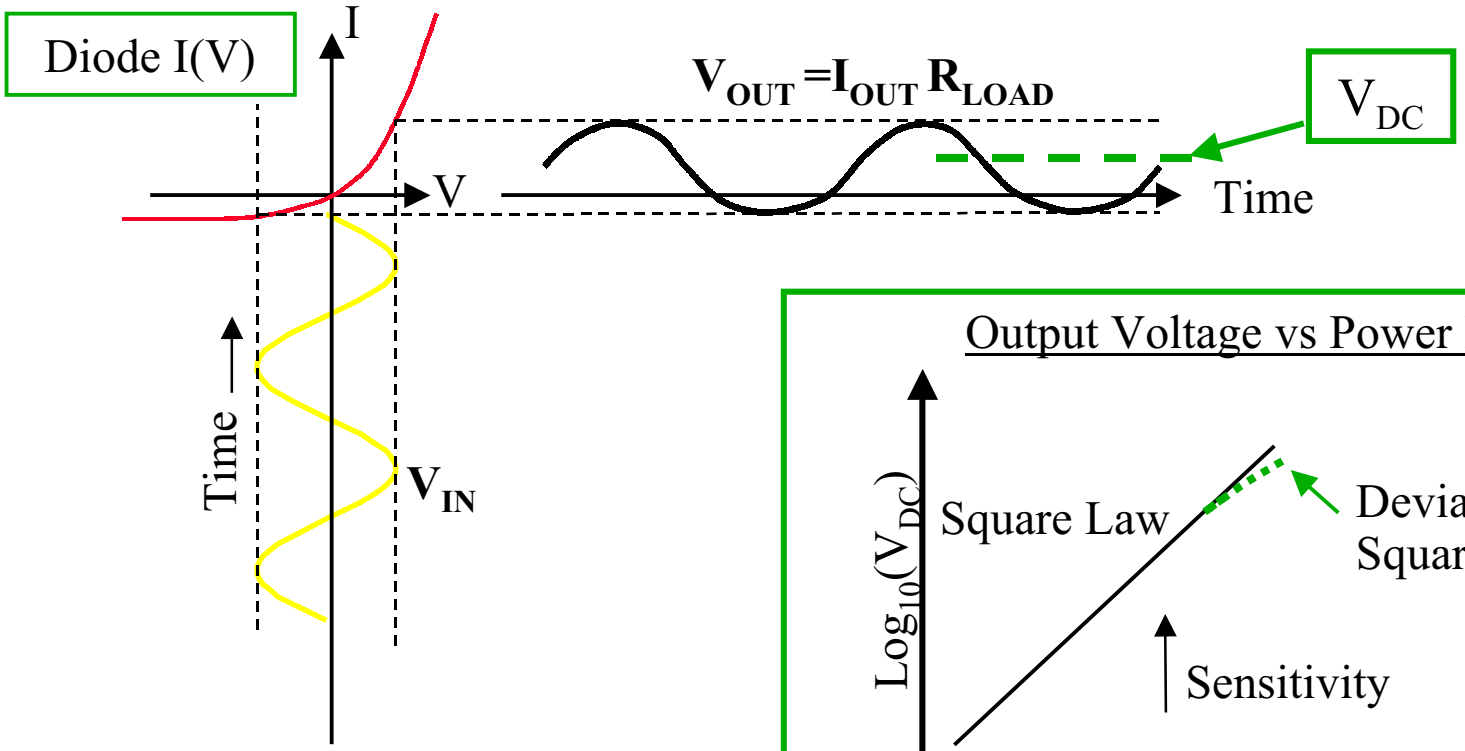

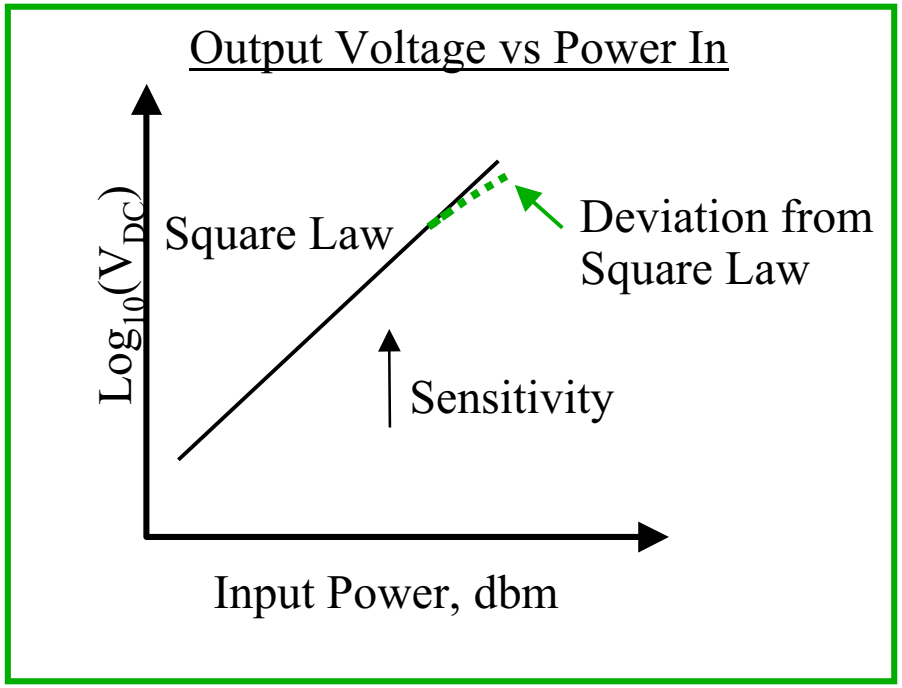

© 1998 HRL Laboratories, LLC. All Rights Reserved

ADVANTAGES OF ZERO BIAS - DIRECT DETECTION

- **Zero Bias**
  - Sensitivity is from I(V) <u>curvature</u>
  - Relative to input signal
  - "Zero Bias" Schottky's need tenths of volts
  - Eliminates extra complexity, noise, power

- **Direct Detection**
  - Direct GHz to DC
  - No mixing, <u>no local oscillator</u>
  - Power savings, stability

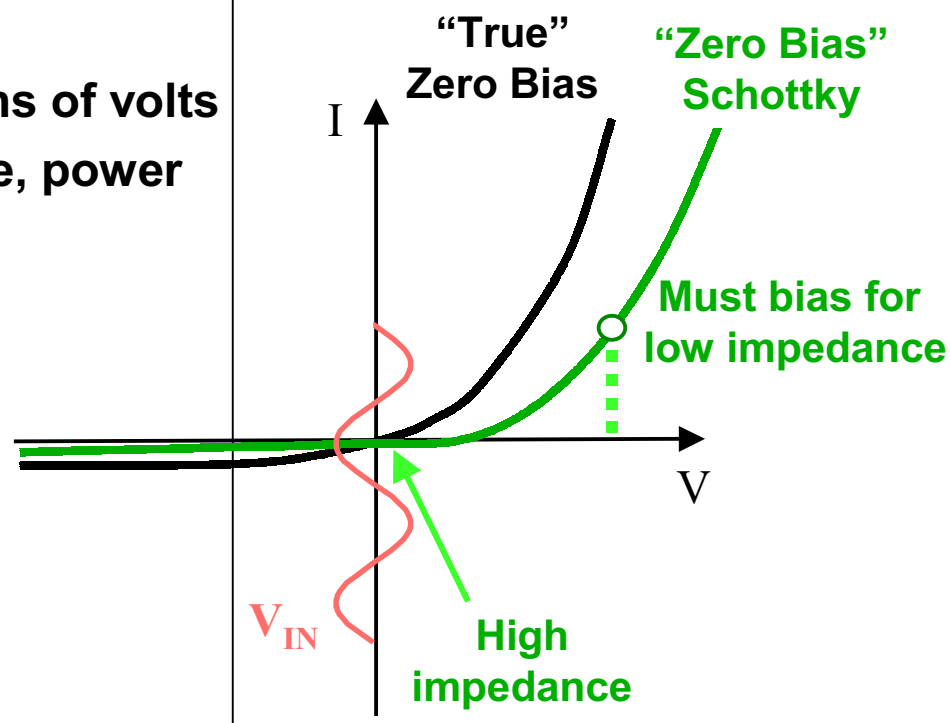

© 1998 HRL Laboratories, LLC. All Rights Reserved

Integrated RITD / HFET epitaxial structure

- ***Structure grown in single MBE growth run***
  - Strain-relaxed InAs nucleation layer
    - Facilitated by *in situ* absorption edge spectroscopy
  - Pseudomorphic AlAs etch stop layers for fabrication process lattitude
- ***HEMT channel transport properties:***

  $\mu_n = 9500\ cm^2/Vs$

  $n_s = 2.7\ 10^{12}\ /cm^2$

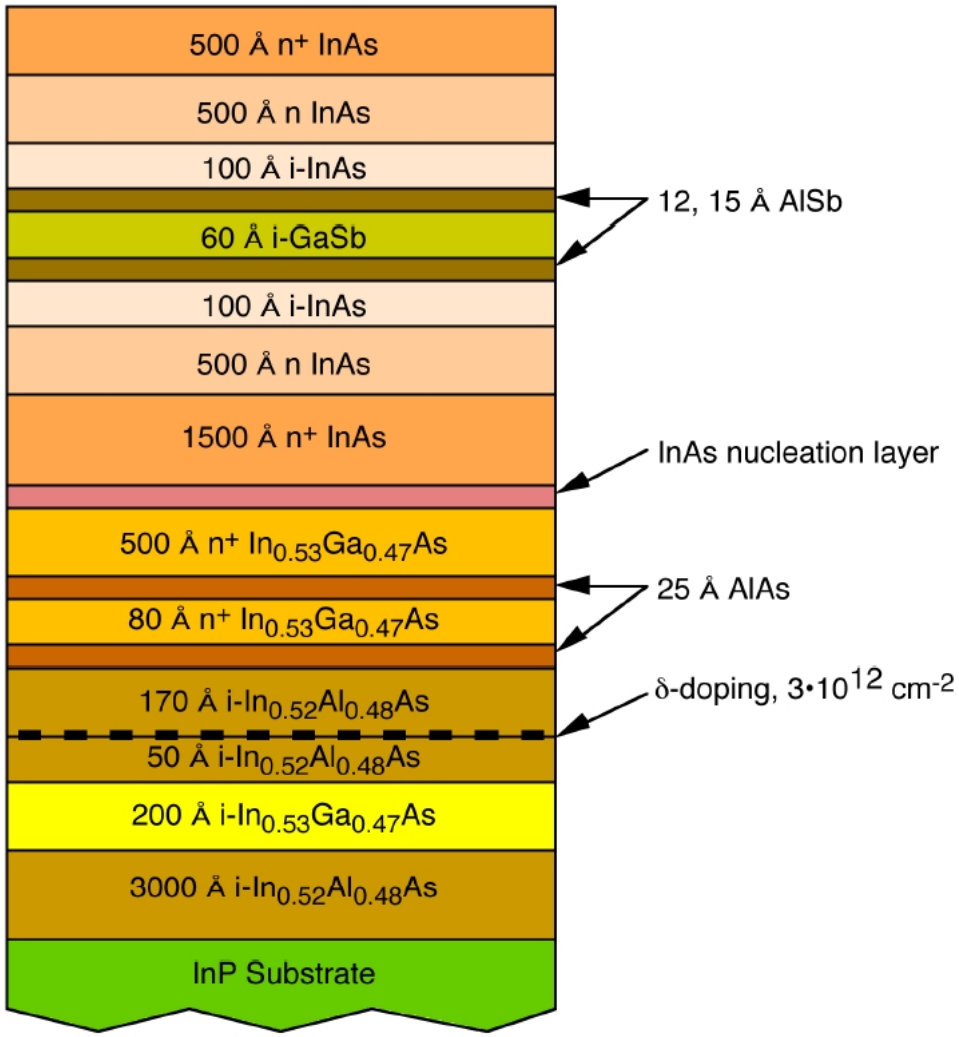

© 1998 HRL Laboratories, LLC. All Rights Reserved

Integrated RITD device characteristics

Control RITD

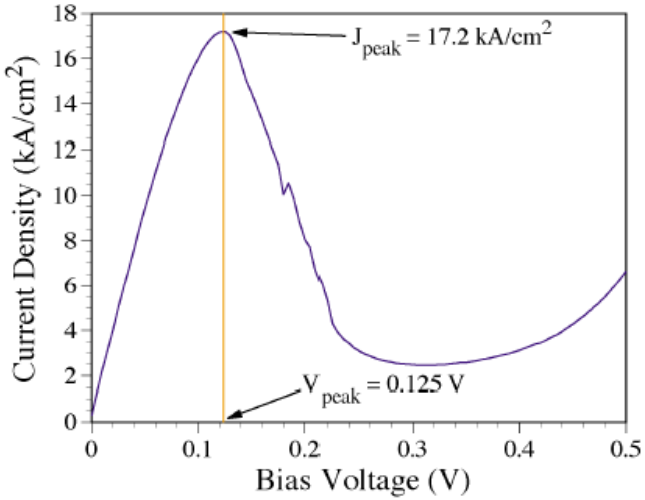

Integrated RITD

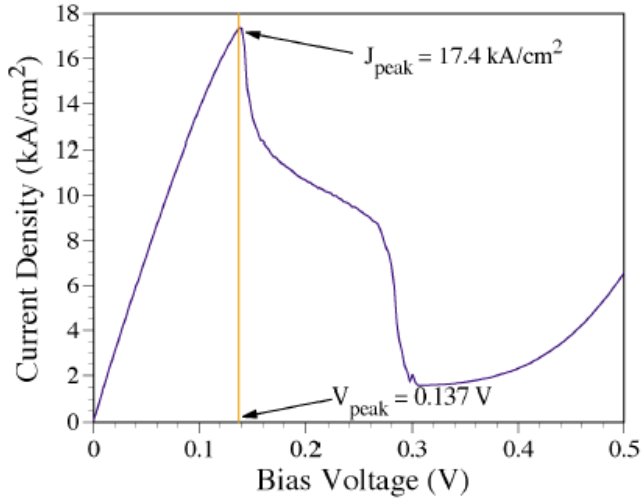

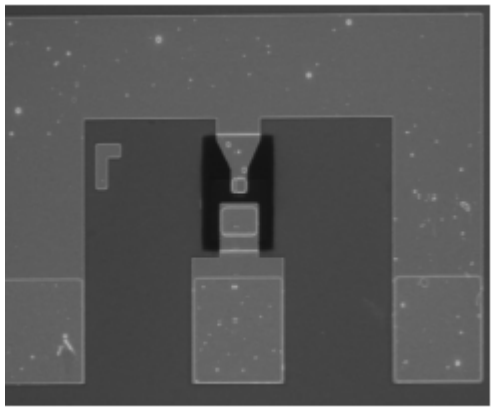

C_{RITD} Extracted from s-parameters

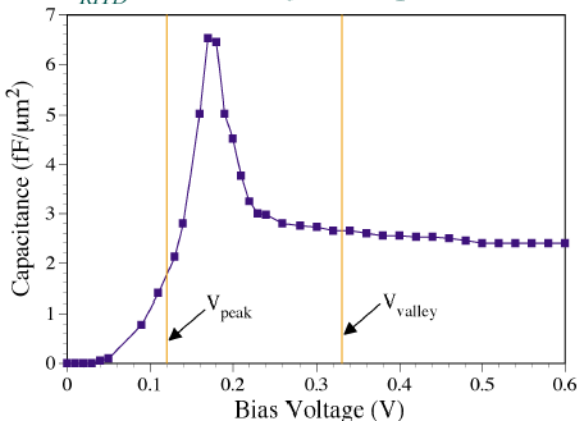

Complete bias-dependent small-signal RITD model extracted, P. Fay et al., submitted to IEEE TED

© 1998 HRL Laboratories, LLC. All Rights Reserved

Integrated HFET Device Characteristics

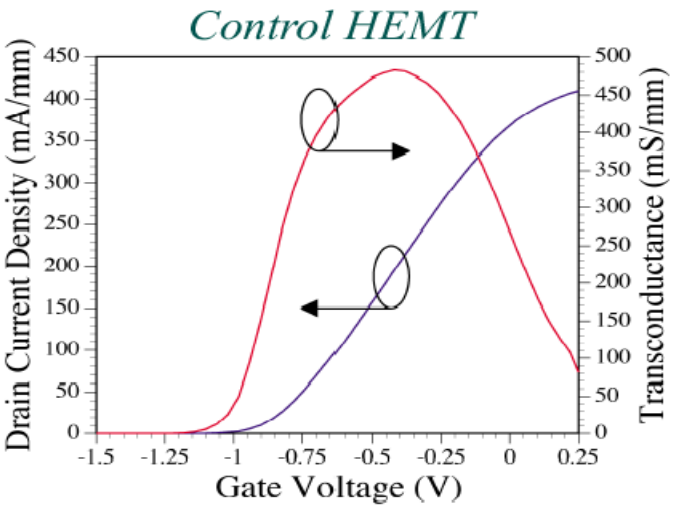

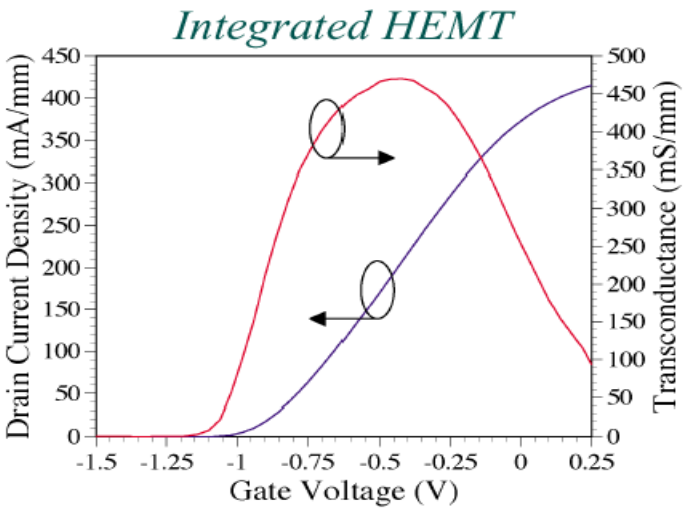

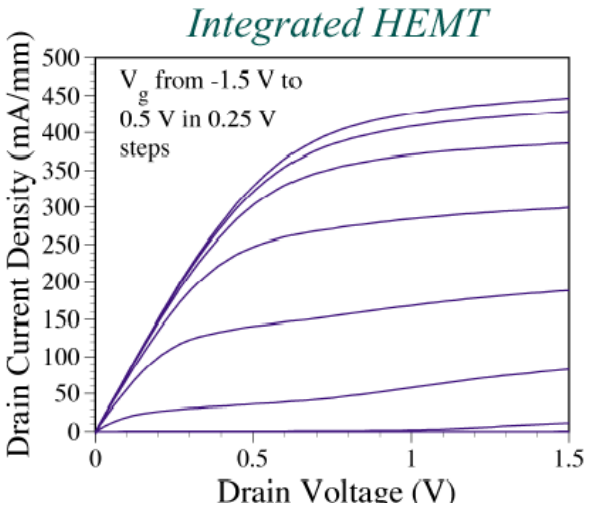

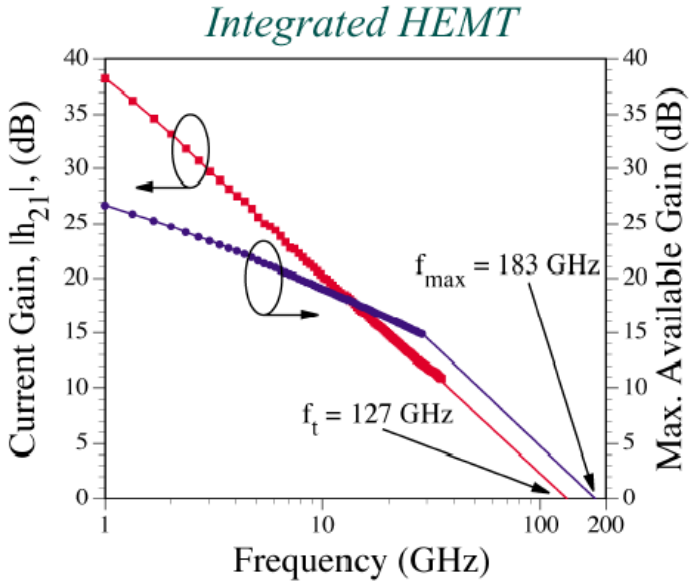

© 1998 HRL Laboratories, LLC. All Rights Reserved

Device Modeling

Integrated RITD/HEMT

HEMT

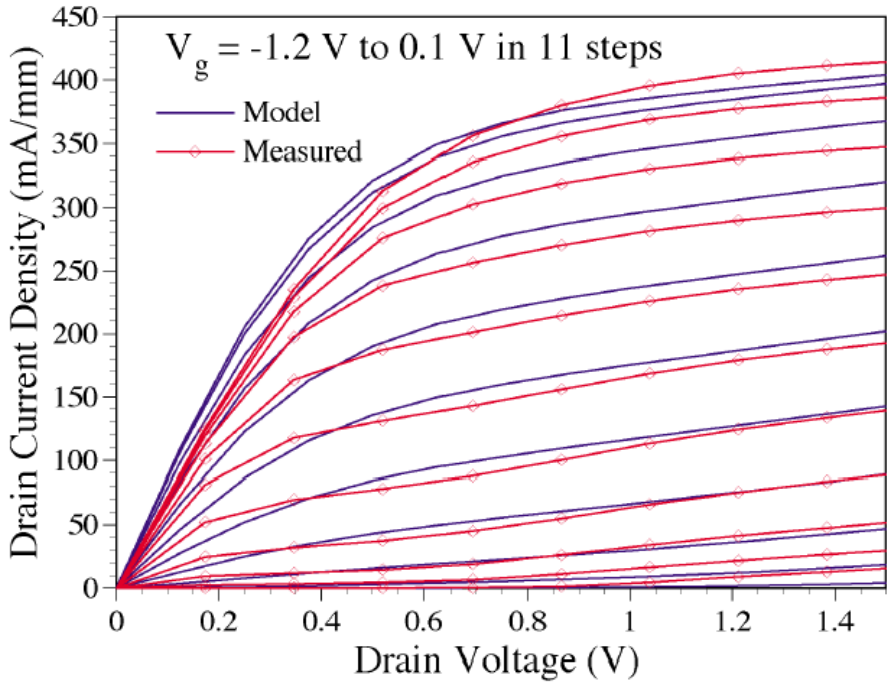

RITD

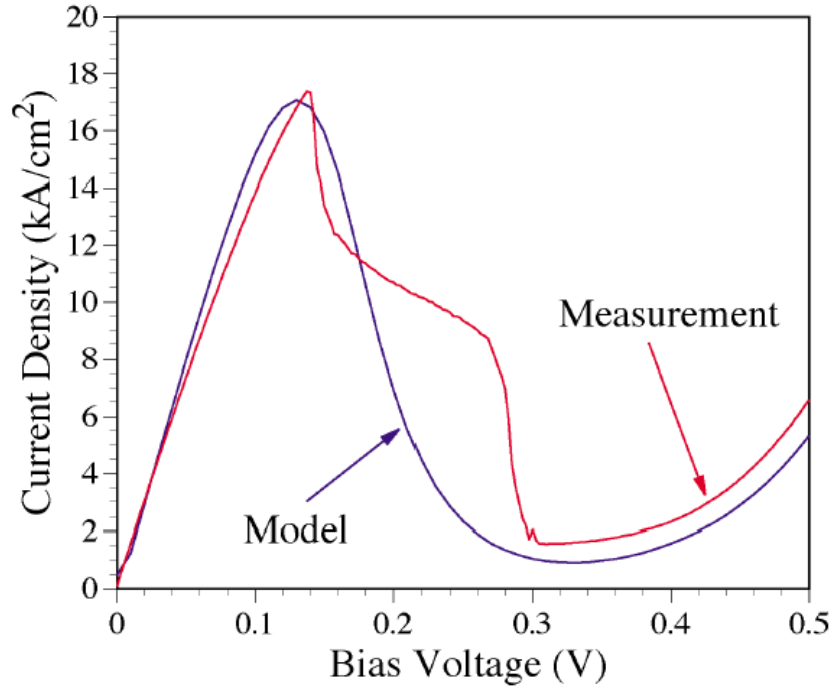

- Good match between model and measurement for both RITD and HEMT achieved
  - HEMT: EEHEMT1 model, Agilent Techologies Libra, MDS, ADS software
  - RITD: Analytic model with non-linear I-V and C-V implemented in Agilent ADS

© 1998 HRL Laboratories, LLC. All Rights Reserved

MOBILE delay flip-flop

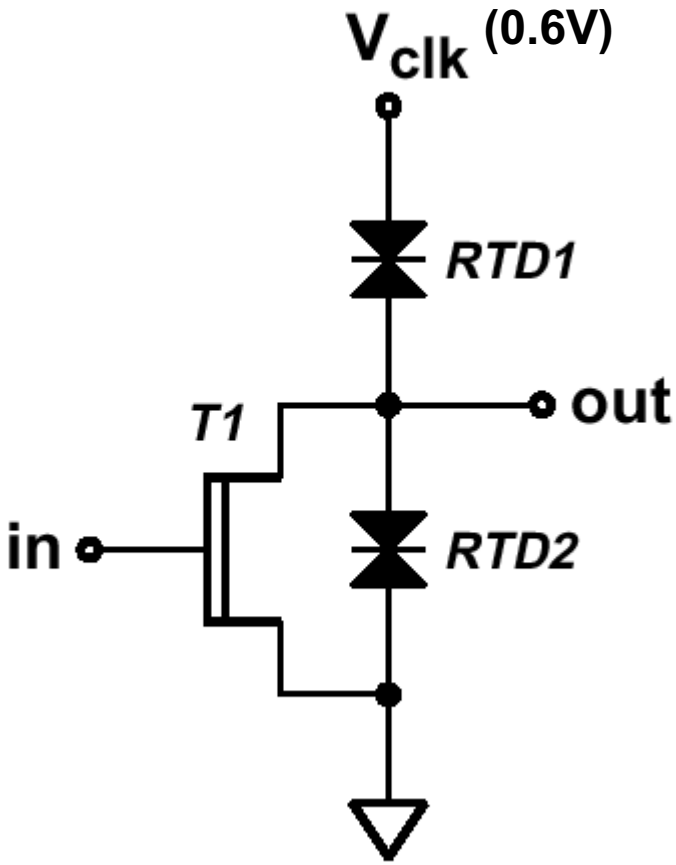

© 1998 HRL Laboratories, LLC. All Rights Reserved

Delay Flip-Flop - Layout

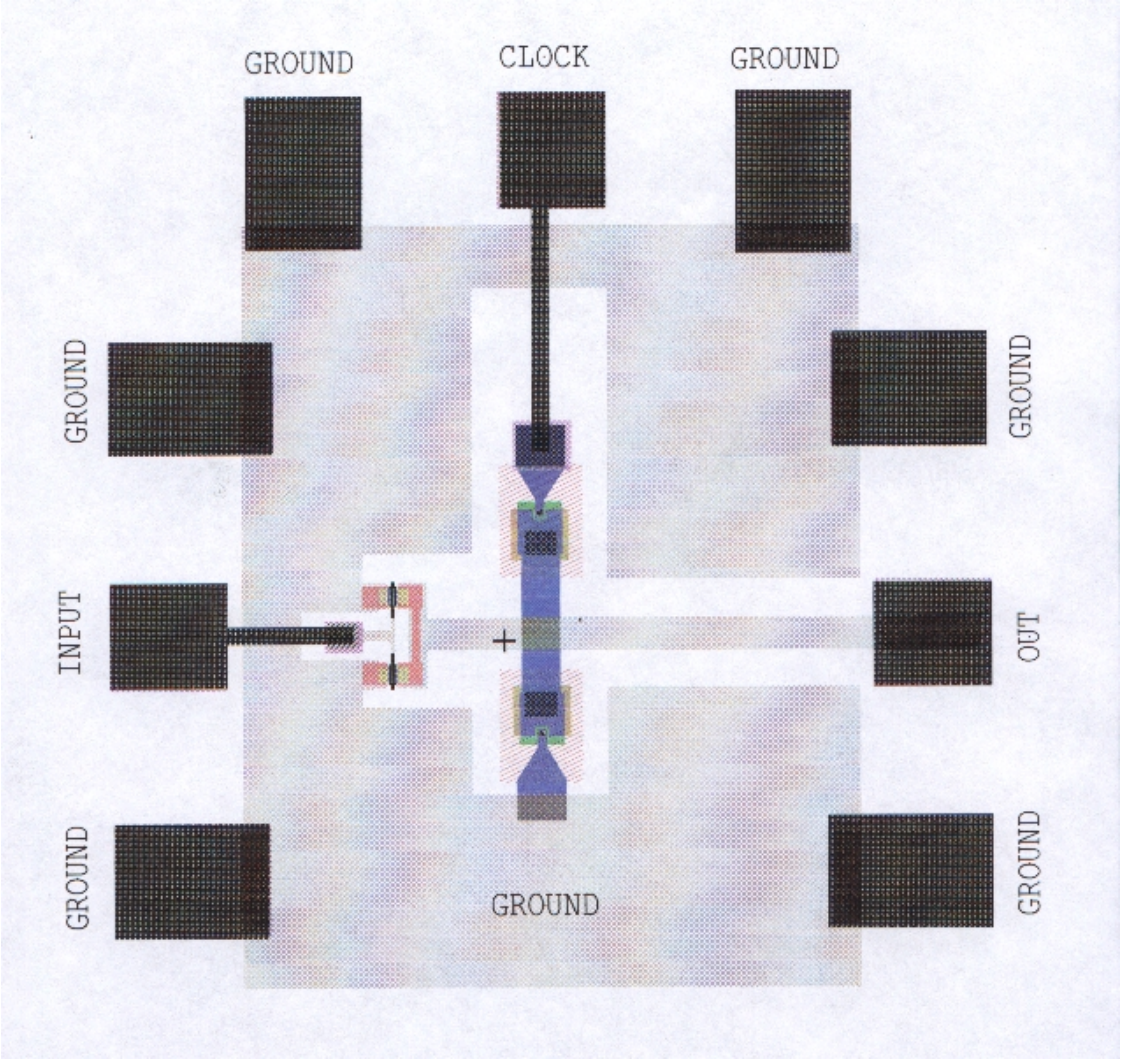

© 1998 HRL Laboratories, LLC. All Rights Reserved

Delay Flip-Flop Demonstrated

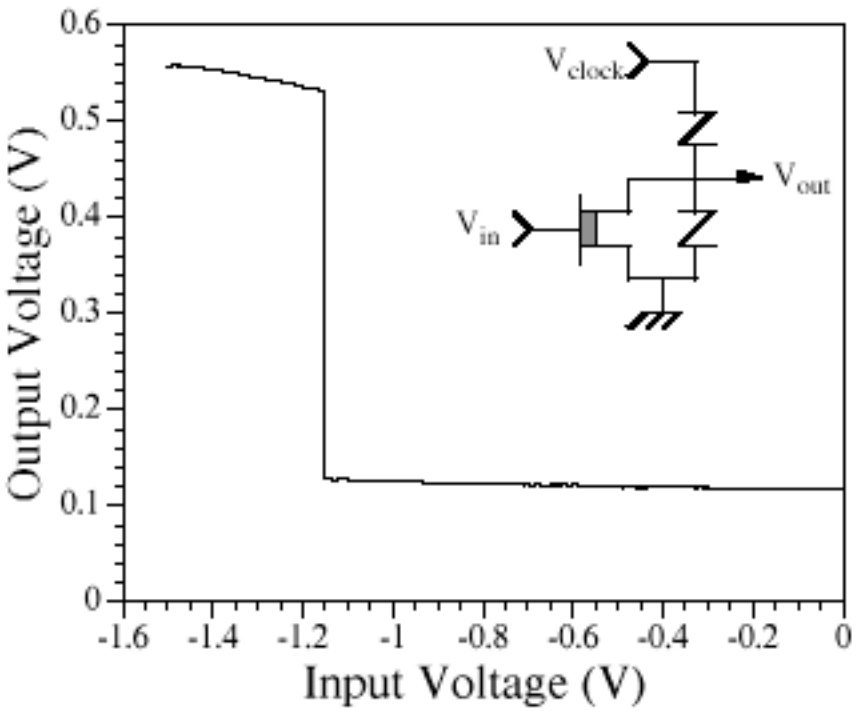

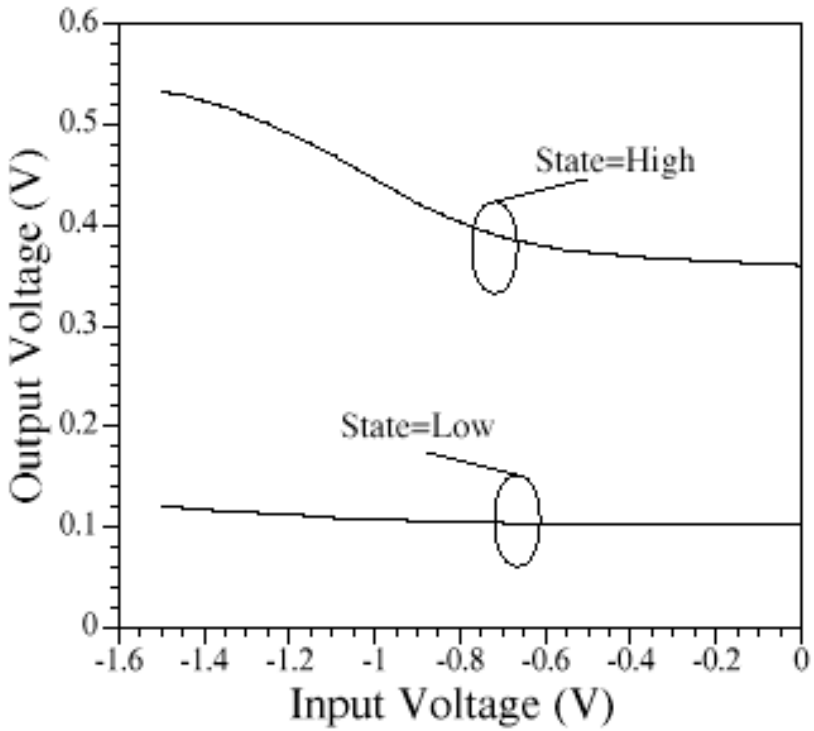

- **Effective voltage gain > 380**
- **Robust latching (latched output state is immune to input voltage)**
- **Power dissipation < 2.8mW/gate**

P. Fay et al., Electronics Letters vol.37, 758 (2001).

© 1998 HRL Laboratories, LLC. All Rights Reserved

E/M Attenuation vs Frequency

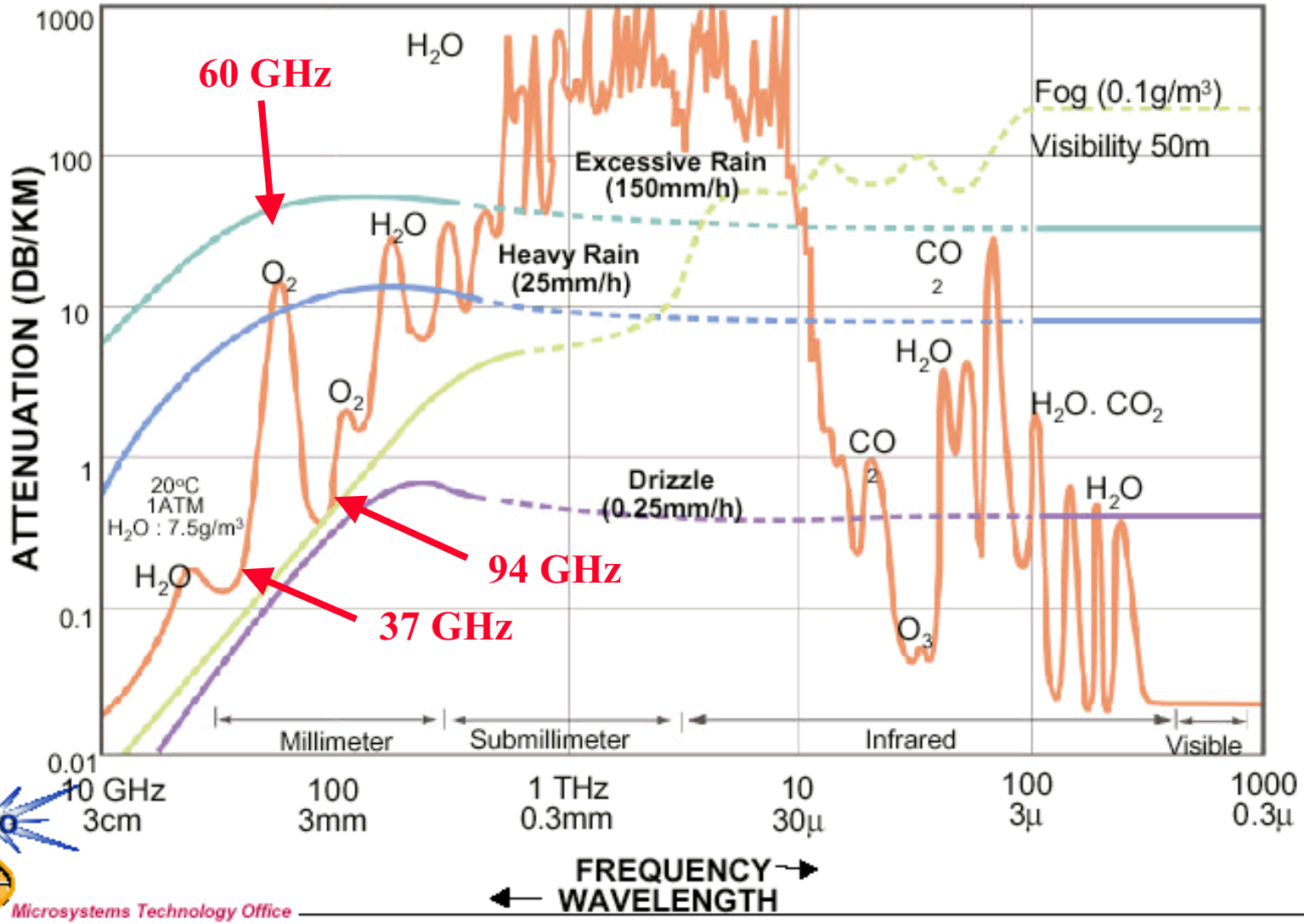

MAPS PMMW IMAGERY

35 GHz

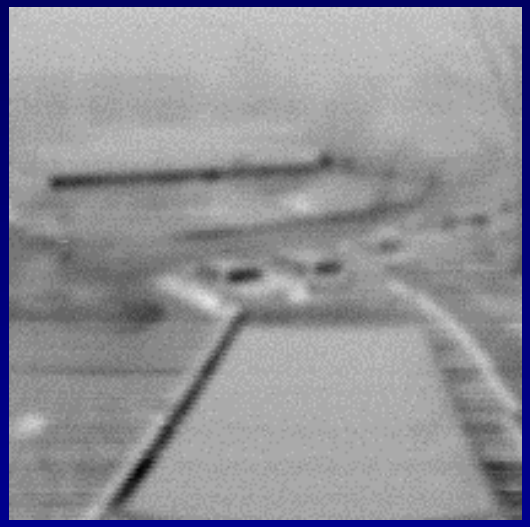

60 GHz

95 GHz

Courtesy of Roger Smith, AFRL, Eglin AFB

Concealed Weapons Detection at 27 Feet

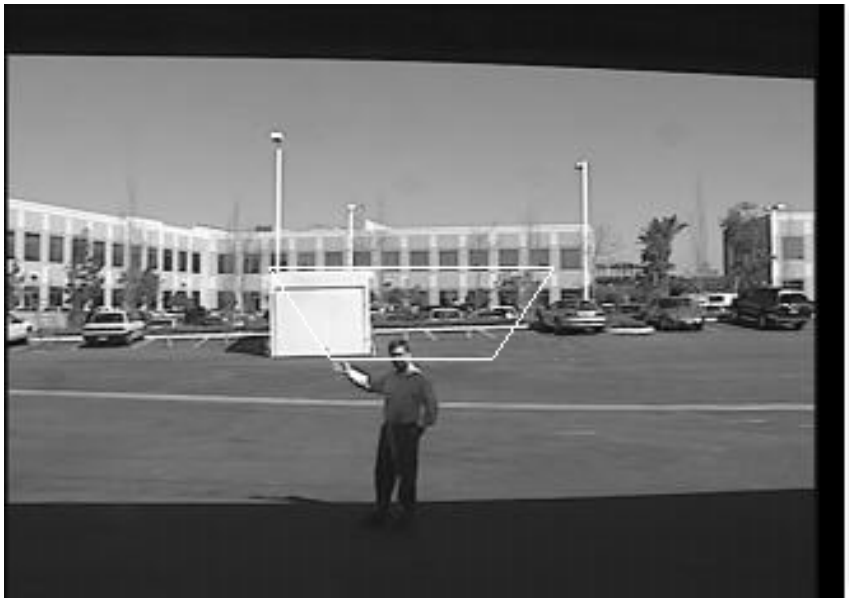

Visible Image

PMC Image

TREX ENTERPRISES

J. Lovberg, J. Galliano, S. Clark, C. Martin

© 1998 HRL Laboratories, LLC. All Rights Reserved

SIMPLE RADIOMETER SYSTEM

- RF power in from source
- Collected by antenna
- Filter may be narrow or wide band
- Amplified by LNA
- (Mixed with local oscillator)

DESIRED CHARACTERISTICS

- Low power consumption
- High sensitivity (voltage per power)
- Stable, low noise
- Low circuit complexity
- Temperature insensitive
- High bandwidth
- Large dynamic range of input power
- Highly linear translation: power to DC

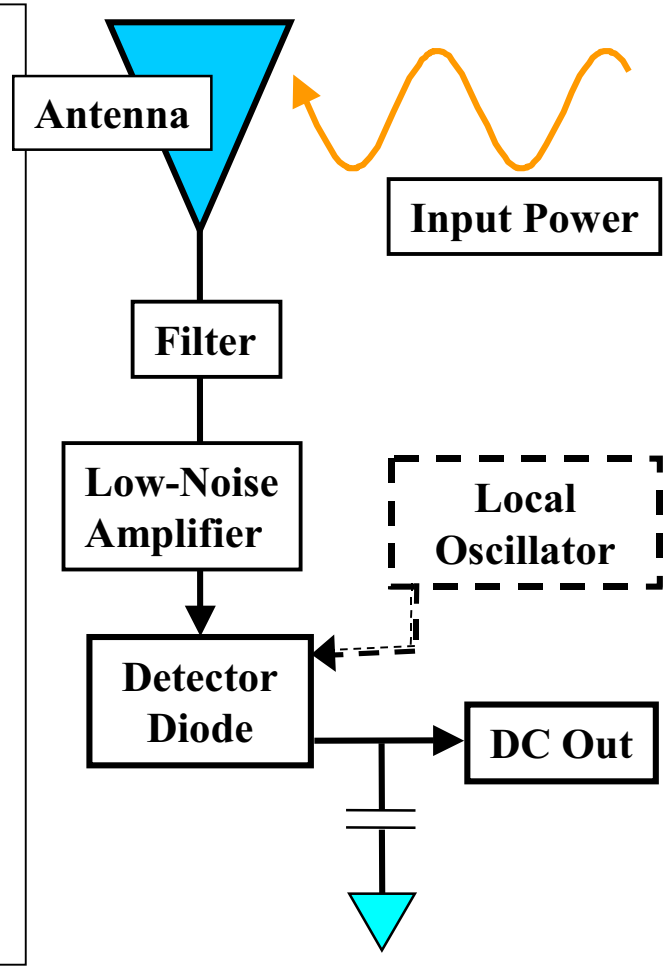

© 1998 HRL Laboratories, LLC. All Rights Reserved

State-of-the-Art Comparison

- Ge Backward Diodes
  - Good only to ~40GHz
  - Mass production difficult (not MBE)
  - Vulnerable to high temperature contacting methods

- Low Voltage Schottky Barrier Diode
  - "Low" is relative: tenths of volts, not millivolts
  - Requires bias for typical passive power levels (~ -40dbm)

- Planar Doped Barrier (PDB) diodes
  - Good to ~100 GHz
  - Expensive (~$30/each); mass production not achieved despite effort
  - Require ultra-high delta doping spike with HIGH tolerance

© 1998 HRL Laboratories, LLC. All Rights Reserved

Simple Sb-Heterostructure Diode: Junction is from band offset, not high doping

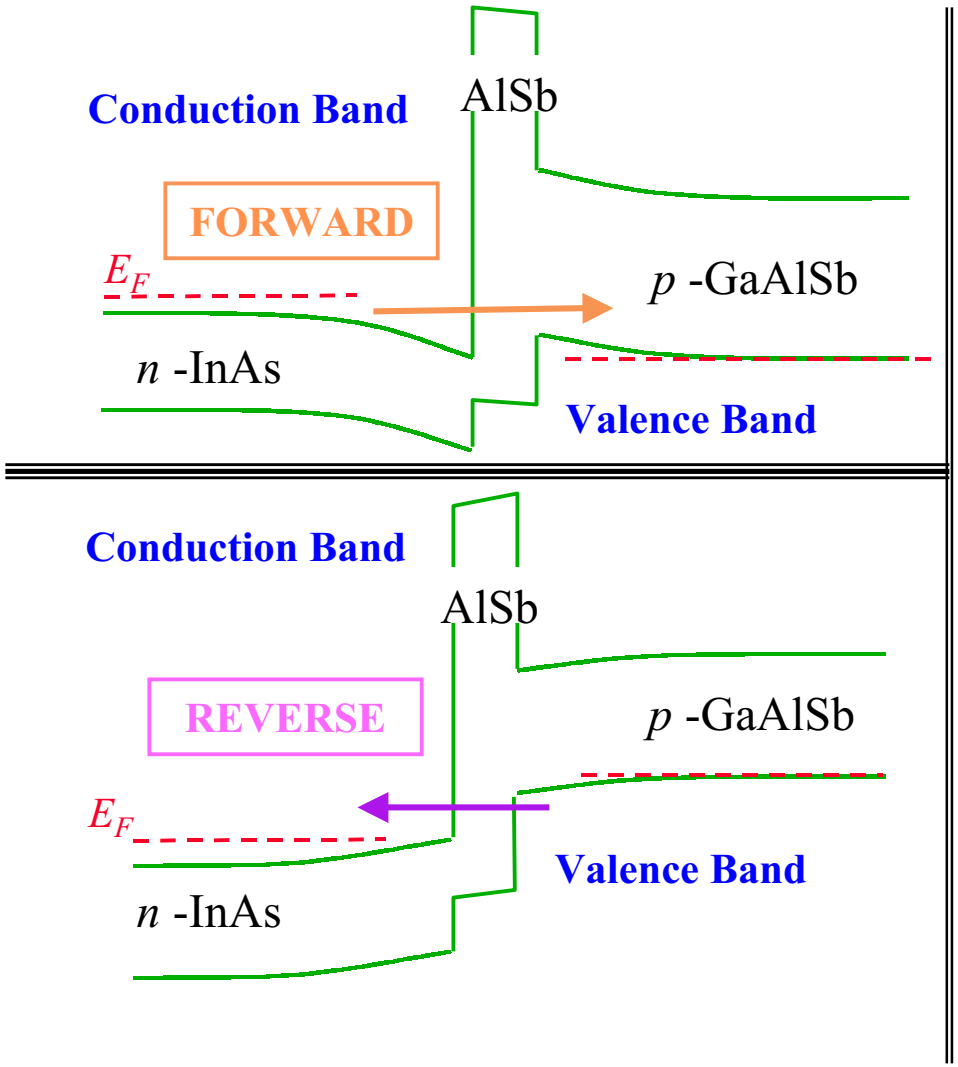

Diode Current vs Voltage

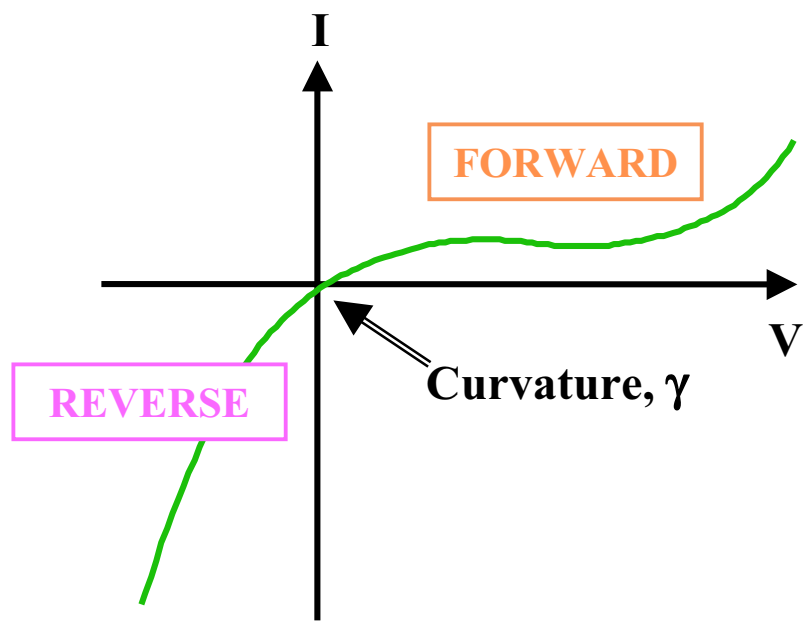

© 1998 HRL Laboratories, LLC. All Rights Reserved

Sb-Heterostructure Diode Band Diagram

Band Diagram

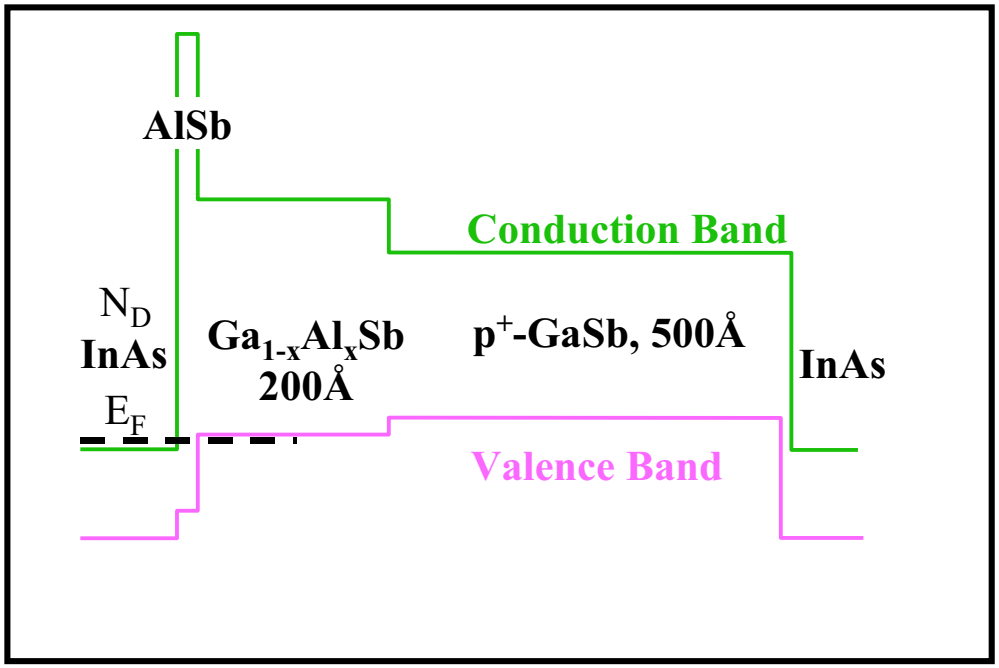

Epilayer Structure

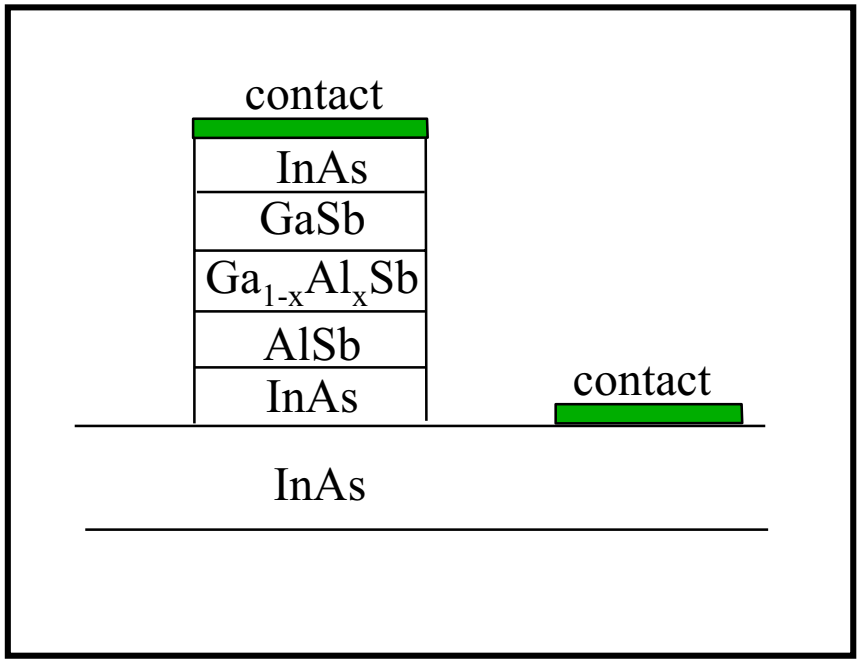

InAs on both sides for low contact resistance

© 1998 HRL Laboratories, LLC. All Rights Reserved

I(V) Curves from Fabricated Sb-Heterostructure Samples

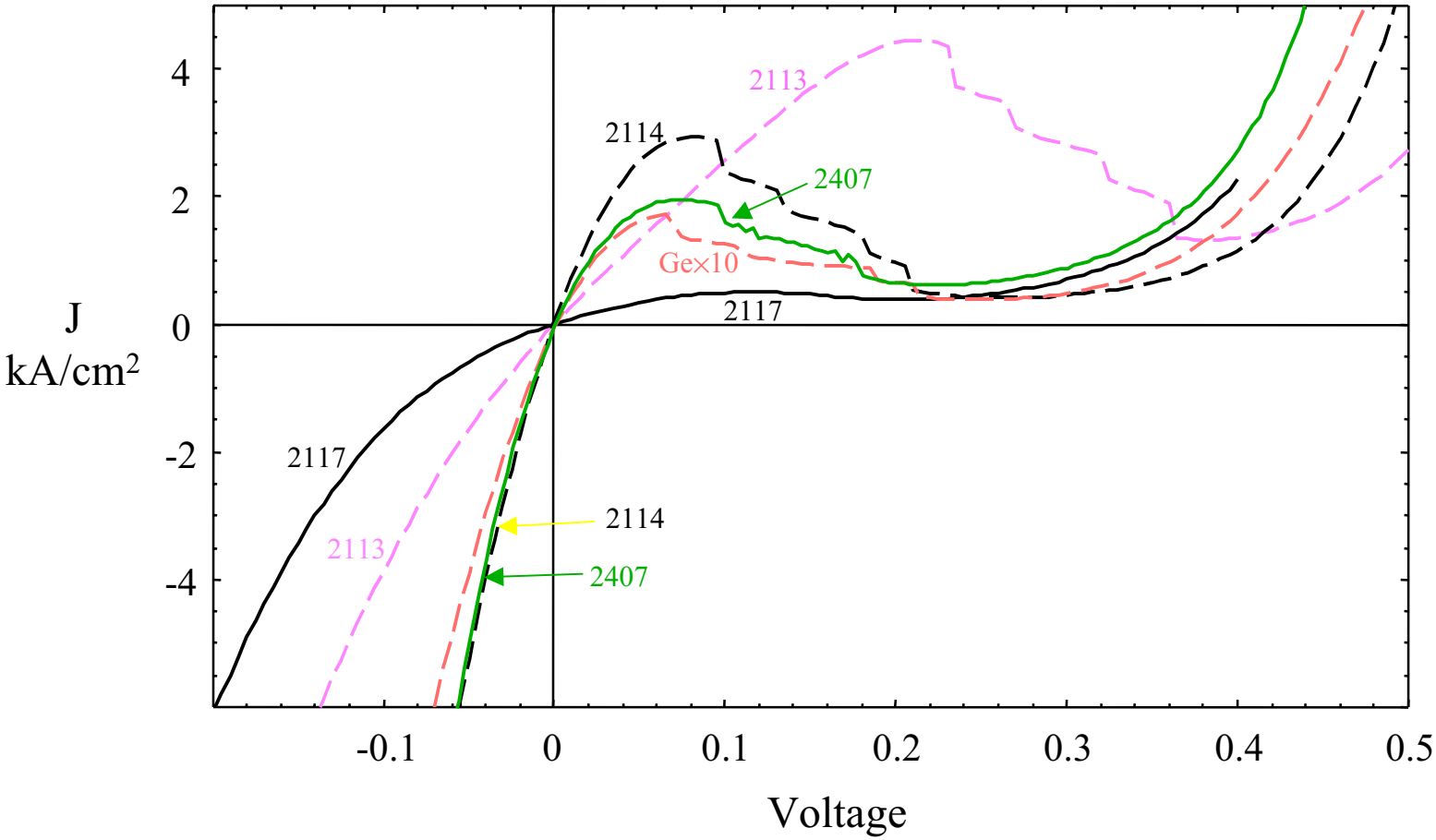

© 1998 HRL Laboratories, LLC. All Rights Reserved

Measured Junction Resistance vs AlSb Barrier Width

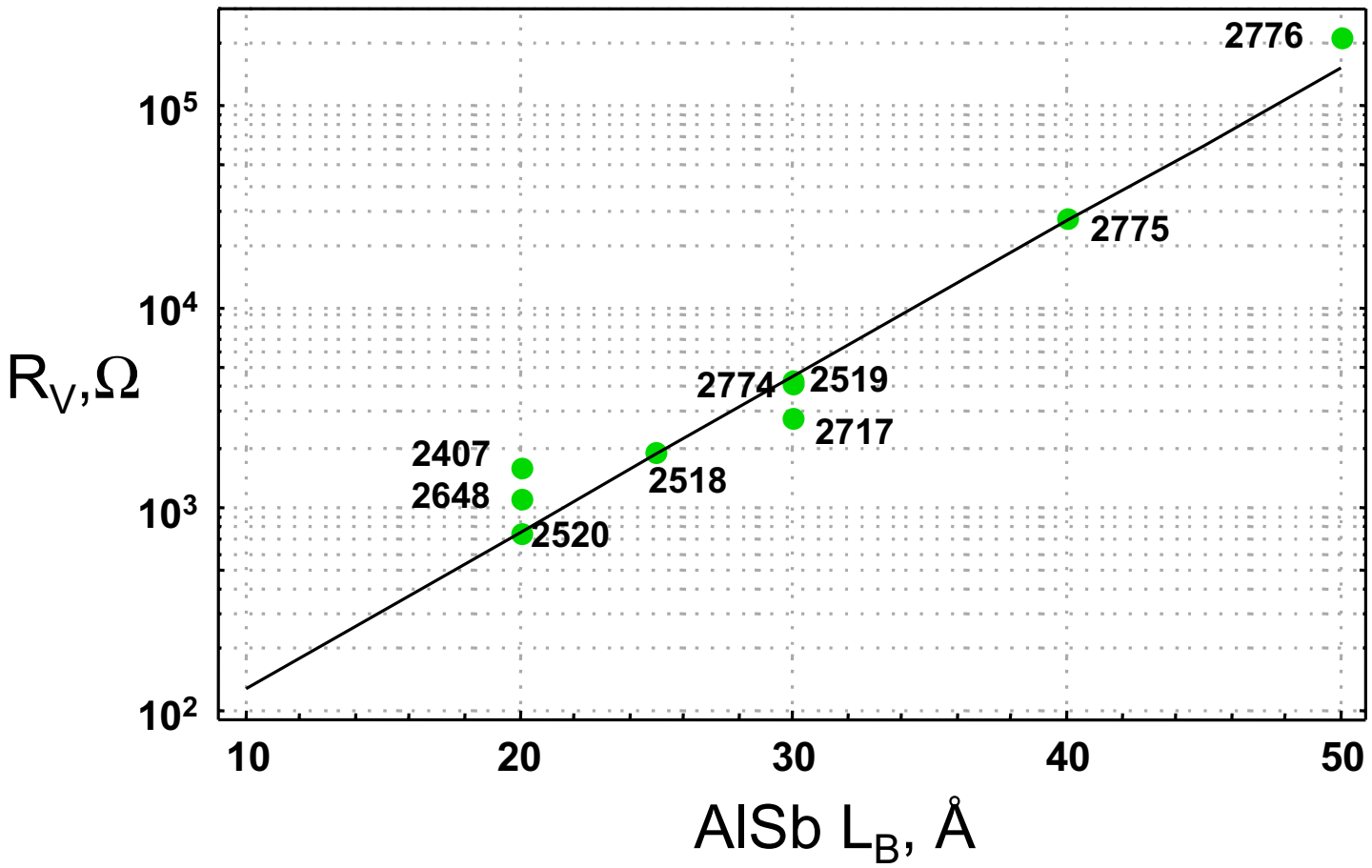

© 1998 HRL Laboratories, LLC. All Rights Reserved

Sb-Heterostructure Diodes
S-Parameter Measurements

Diced Part

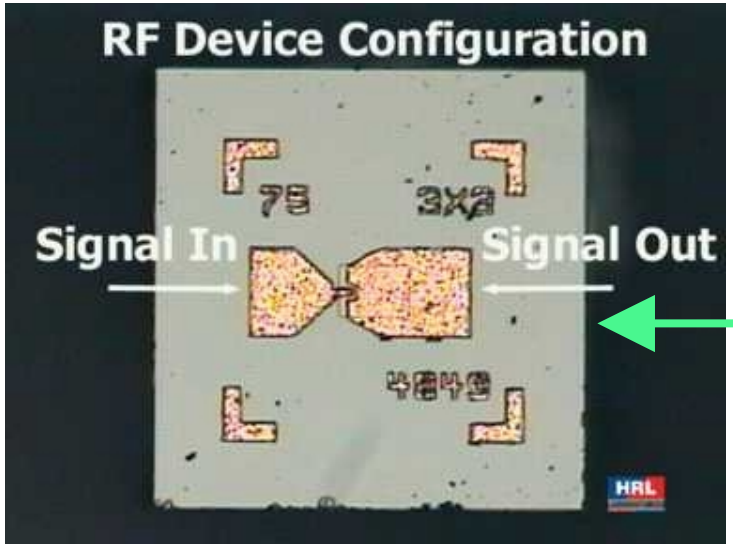

Diodes Only

Calibration and
S-Parameter Measurements

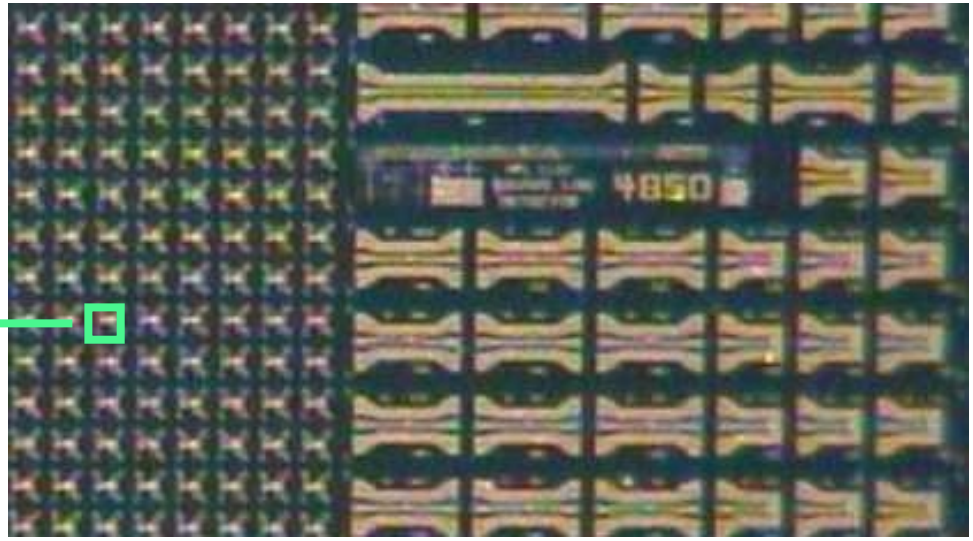

© 1998 HRL Laboratories, LLC. All Rights Reserved

Caltech/JPL S-Parameter and Sensitivity Measurements: SB2775

M. Morgan and S. Weinreb

- S-parameter measurements and circuit model
- Sensitivity measurements
- 1 GHz to 130 GHz

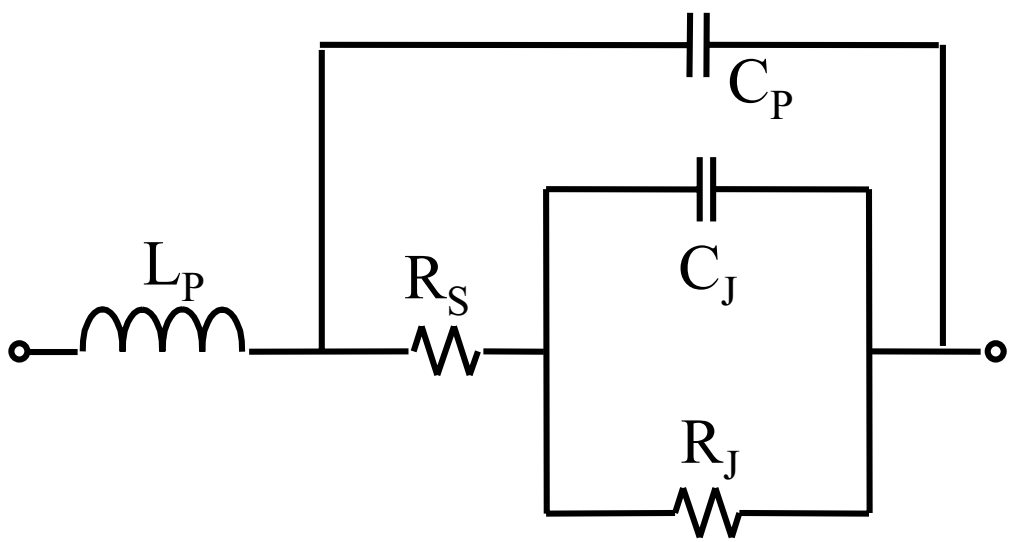

© 1998 HRL Laboratories, LLC. All Rights Reserved

Diode Impedance Data and Model Fit

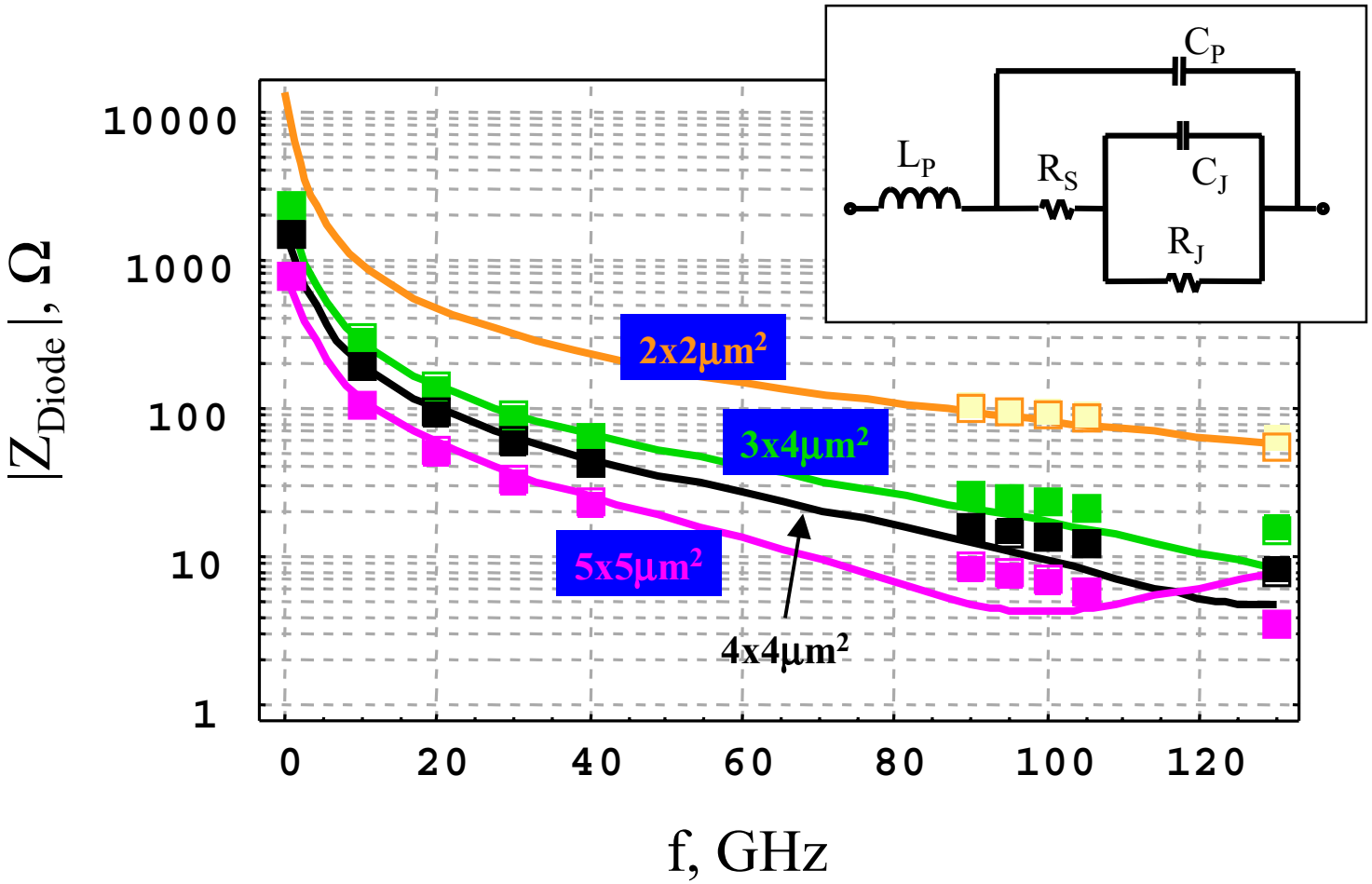

© 1998 HRL Laboratories, LLC. All Rights Reserved

SB2775 Small Signal Model Impedance and Sensitivity

chip	C_p [fF]	R_s [Ω]	R_j [Ω]	C_j [fF]	f_c [GHz]	Z_{diode} @ 95 GHz (measured) [Ω]	β_v @ 95 GHz (measured) [μV/μW]	$\beta_{v,opt}$ @ 95 GHz (calculated) [μV/μW]
04(2x2)	6	63	9567	11	230	26-j92	2768	7576
05(2x2)	6	69	13204	11	210	30-j91	2664	6483
34(3x4)	17	11	2249	39	371	8.3-j23	750	1781
35(3x4)	17	11	2284	37	391	8.1-j23	837	2013
44(4x4)	22	9	1542	57	310	6.2-j14	336	907
45(4x4)	22	10	1460	57	279	6.6-j13	385	986
54(5x5)	31	7	805	103	221	4.6-j6.0	101	331
55(5x5)	31	7	781	97	234	4.8-j6.0	106	333

(L_P=20pH)

© 1998 HRL Laboratories, LLC. All Rights Reserved

Voltage Sensitivity Analysis

$$\beta_V = \frac{R_J \gamma/2}{(1+R_S/R_J)\left((1+R_S/R_J)+(2\pi f C_J)^2 R_S R_J\right)} \frac{R_L}{R_L+R_S+R_J}$$

- SPICE and textbook formula for DC voltage out per power in at di ode
- C_J, R_S from S-parameter analysis
- R_J from DC I(V) measurement
- SPICE calculation for dynamic range
- SPICE calculation for HP/Agilent diode
- Note: high frequency limit is R_J independent. (also, $R_S \ll R_J \ll R_L$)

$$f \geq f_C = \frac{1}{2\pi}\sqrt{\frac{1}{C_J^2 R_S R_J}} \qquad \beta_V = \frac{\gamma/2}{(2\pi f C_J)^2 R_S}$$

© 1998 HRL Laboratories, LLC. All Rights Reserved

Voltage Sensitivity vs Frequency: SB2519

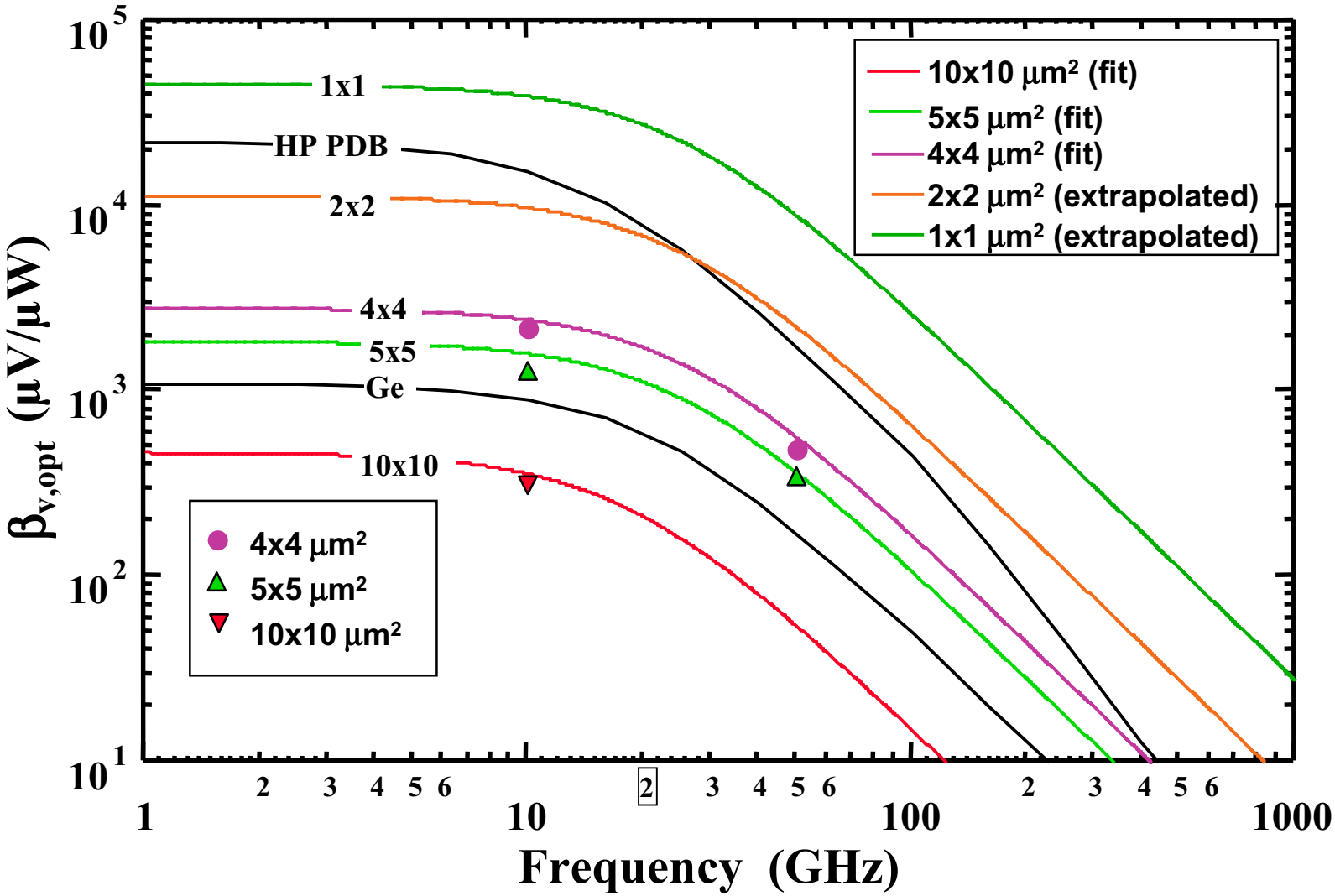

© 1998 HRL Laboratories, LLC. All Rights Reserved

HRL LABORATORIES

Summary

- Integration of RITDs with high performance transistors still promising
- Primary benefit for high performance circuits is reduced power consumption and complexity
- Standalone InAs/AlSb/GaSb tunneling diodes interesting for several zero bias diode applications
- Excellent control of junction resistance
- Low parasitic series resistance achievable (InAs contacts/electrodes)
- Interband tunneling diodes are already the leading candidate solution for 94 GHz imaging systems

© 1998 HRL Laboratories, LLC. All Rights Reserved